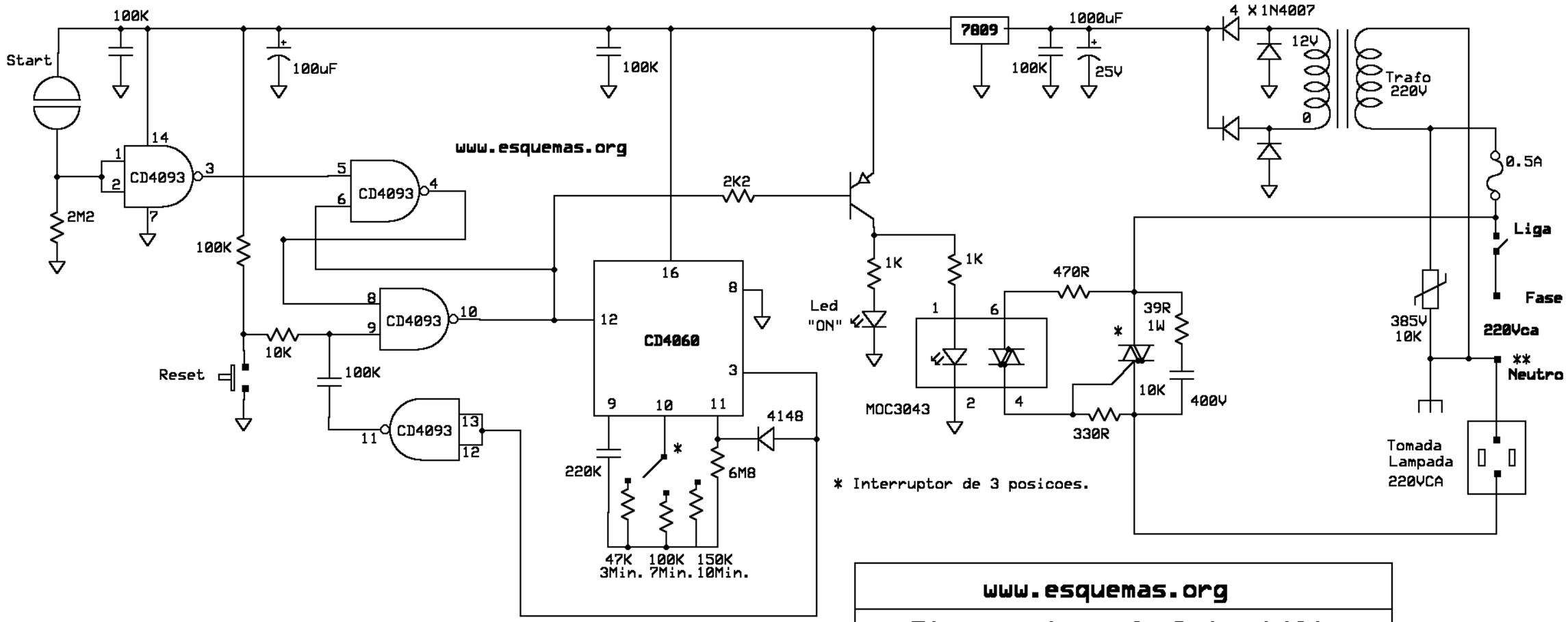

www.esquemas.org		
Timer p/ Lampada Infraphil*		
	24/09/04	