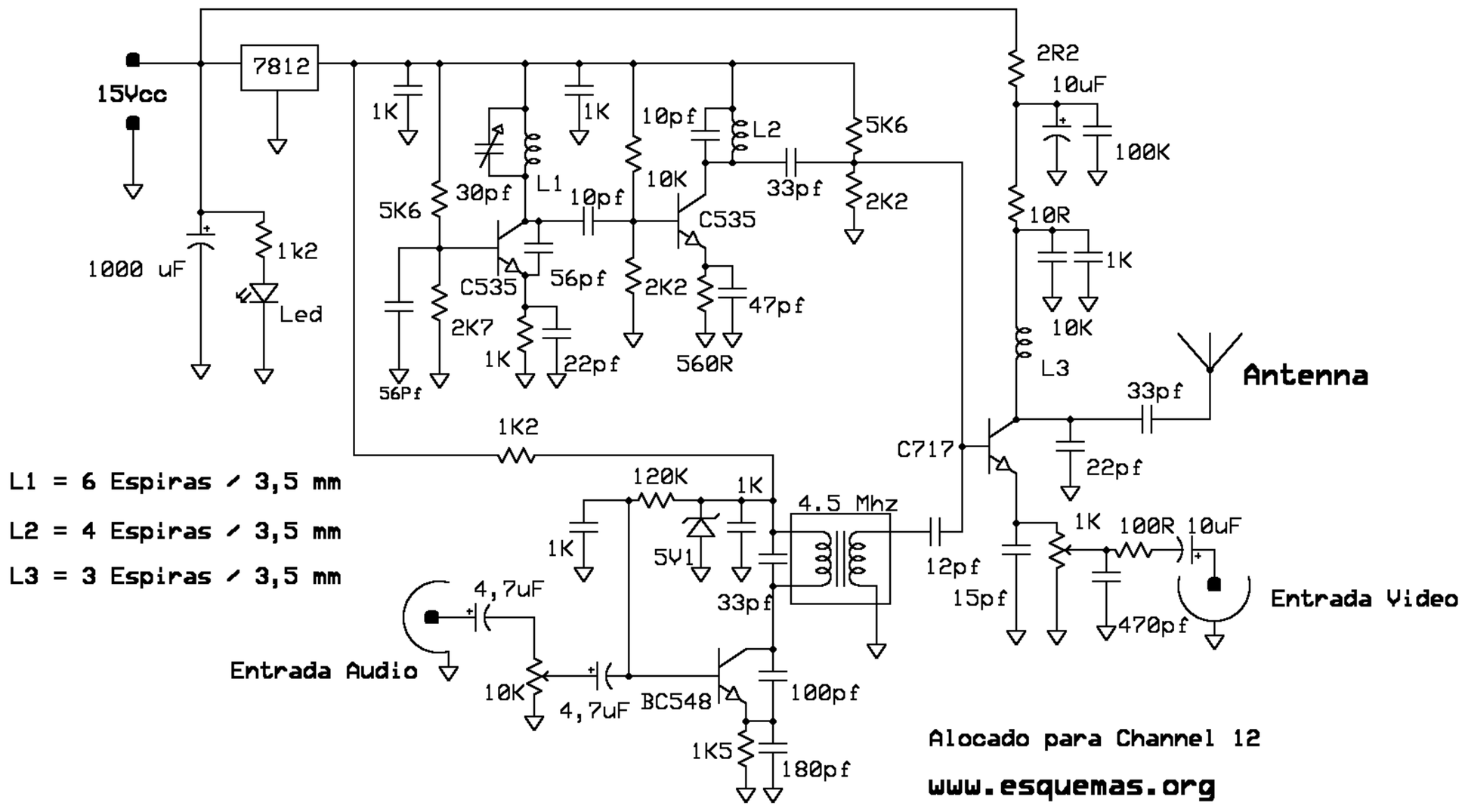

esquemas.org		
Video Transmitter		
Designer's name	Rev 1.0 14/06/03	Page # or name