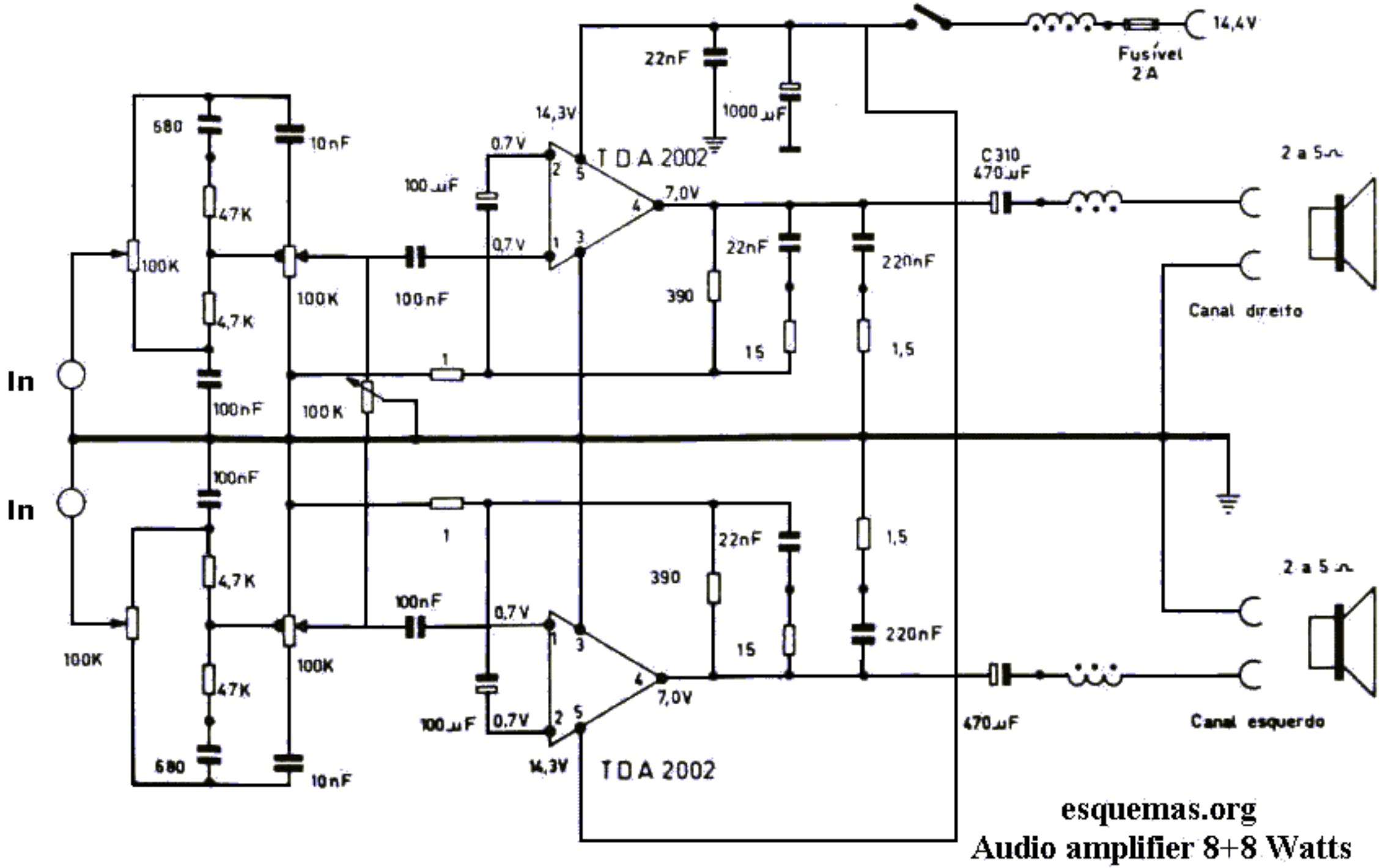

esquemas.org

Audio amplifier 8+8 Watts